PHYSICS 331 ADVANCED CLASSICAL MECHANICS
Problem Set 33

Problem 1
Use Lagrange's approach to extract the equations of motion (equations 12.1) for the two-mass/three-spring system shown in Figure 12-1 of our textbook.

Problem 2
Thornton and Marion: Chapter 12, Problem 4.

Problem 3
Show that condition 12.23 follows from the initial conditions described by the equations in 12.22 for the case of the weakly coupled system. All references are to our textbook by Thornton and Marion.

Problem 4
Thornton and Marion: Chapter 12, Problem 11.

Other Things
Read Marion and Thornton's chapter 12, sections 12.4 and 12.6, and skim through section 12.5. Please remember to submit your journal entry.

Consider the system:

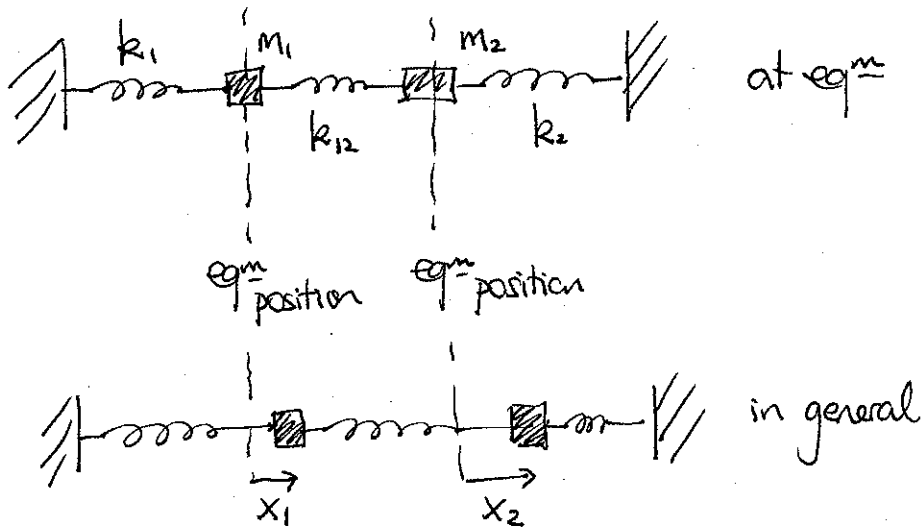

Using the Lagrangian approach to extract the equations of motion:

$$\mathcal{L} = T - U$$

Now, $T = \frac{1}{2} m_1 \dot{x}_1^2 + \frac{1}{2} m_2 \dot{x}_2^2 = \frac{1}{2} M(\dot{x}_1^2 + \dot{x}_2^2)$ since $m_1 = m_2 = M$

$$U = \frac{1}{2} k_1 x_1^2 + \frac{1}{2} k_{12} (x_2 - x_1)^2 + \frac{1}{2} k_2 x_2^2$$

$$= \frac{1}{2} k_1 x_1^2 + \frac{1}{2} k_{12} (x_2^2 - 2x_1 x_2 + x_1^2) + \frac{1}{2} k_2 x_2^2$$

$$\therefore \quad \mathcal{L} = \frac{1}{2} M \dot{x}_1^2 + \frac{1}{2} M \dot{x}_2^2 - x_1^2 \left(\frac{1}{2} k_1 + \frac{1}{2} k_{12}\right) - x_2^2 \left(\frac{1}{2} k_{12} + \frac{1}{2} k_2\right) + k_{12} x_1 x_2$$

Lagrange's eqns are of the form:

$$\frac{\partial L}{\partial x_1} - \frac{d}{dt}\left(\frac{\partial L}{\partial \dot{x}_1}\right) = 0$$

$$\frac{\partial L}{\partial x_2} - \frac{d}{dt}\left(\frac{\partial L}{\partial \dot{x}_2}\right) = 0$$

now, $\frac{\partial L}{\partial x_1} = -2x_1 \left(\frac{1}{2} k_1 + \frac{1}{2} k_{12}\right) + k_{12} x_2$

$$\frac{\partial L}{\partial \dot{x}_1} = M \dot{x}_1$$

$$\frac{\partial L}{\partial x_2} = -2x_2 \left(\frac{1}{2} k_{12} + \frac{1}{2} k_2\right) + k_{12} x_1$$

$$\frac{\partial L}{\partial \dot{x}_2} = M \dot{x}_2$$

$\therefore$ equations of motion are:

X_1 eq^{n} $\quad M\ddot{x}_1 + (k_1 + k_{12})x_1 - k_{12}x_2 = 0$

X_2 eq^{n} $\quad M\ddot{x}_2 + (k_{12} + k_2)x_2 - k_{12}x_1 = 0$

These are the same equations on those obtained in eq^{n} (12-1) of our text:

coupled, linear differential equations.

M&T 12-4 Consider the system:

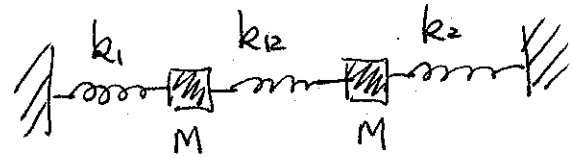

To show that the total energy of the system is constant, would like to show $\frac{dE_{tot}}{dt} = 0$.

now, $E_{TOT} = (K_{tot} + U_{tot})$ where $K_{tot} = \frac{1}{2}M\dot{x}_1^2 + \frac{1}{2}M\dot{x}_2^2$

$$U_{tot} = \frac{1}{2}k_1 x_1^2 + \frac{1}{2}k_{12}(x_2 - x_1)^2 + \frac{1}{2}k_2 x_2^2$$

$$\therefore \quad E_{tot} = \frac{1}{2}M\dot{x}_1^2 + \frac{1}{2}M\dot{x}_2^2 + \frac{1}{2}(k_1 + k_{12})x_1^2 + \frac{1}{2}(k_{12} + k_2)x_2^2 - k_{12}x_1x_2$$

now,

$$\frac{dE_{tot}}{dt} = \frac{d}{d\dot{x}_1} \cdot \frac{d\dot{x}_1}{dt}\left(\frac{1}{2}M\dot{x}_1^2\right) + \frac{1}{2}M \cdot 2\dot{x}_2 \frac{d\dot{x}_2}{dt} + \frac{1}{2}(k_1 + k_{12}) \cdot 2x_1 \frac{dx_1}{dt}$$

$$+ \frac{1}{2}(k_{12} + k_2) \cdot 2x_2 \frac{dx_2}{dt} - k_{12}x_2 \frac{dx_1}{dt} - k_{12}x_1 \frac{dx_2}{dt}$$

$$= M\dot{x}_1\ddot{x}_1 + M\dot{x}_2\ddot{x}_2 + (k_1 + k_{12})x_1\dot{x}_1 + (k_{12} + k_2)x_2\dot{x}_2 - k_{12}x_2\dot{x}_1 - k_{12}x_1\dot{x}_2$$

$$= \dot{x}_1 \underbrace{\left\{M\ddot{x}_1 + (k_1 + k_{12})x_1 - k_{12}x_2\right\}}_{=0} + \dot{x}_2 \underbrace{\left\{M\ddot{x}_2 + (k_{12} + k_2)x_2 - k_{12}x_1\right\}}_{=0}$$

(this is one of the eqns of motion) this is the x_2 eqn of motion

$= 0$

hence, $\frac{dE_{tot}}{dt} = 0 \Rightarrow E_{tot}$, the total energy of the system is conserved.

M&T 12-4 (cont^d)

Writing the total energy in terms of the generalised coordinates:

$$\eta_1 = x_1 - x_2$$
$$\eta_2 = x_1 + x_2$$

then, $x_1 = \frac{1}{2}(\eta_1 + \eta_2)$ and $x_2 = \frac{1}{2}(\eta_2 - \eta_1)$

now, $E_{tot} = T_{tot} + U_{tot}$ and $T_{tot} = \frac{1}{2}M \cdot \frac{1}{4}(\dot{\eta}_1 + \dot{\eta}_2)^2 + \frac{1}{2}M\frac{1}{4}(\dot{\eta}_2 - \dot{\eta}_1)^2$

$$= \frac{1}{4}M(\dot{\eta}_1^2 + \dot{\eta}_2^2)$$

$$U_{tot} = \frac{1}{2}k_1 x_1^2 + \frac{1}{2}k_{12}(x_1 - x_2)^2 + \frac{1}{2}k_2 x_2^2$$

$$= \frac{1}{4}k_1(\eta_1 + \eta_2)^2 + \frac{1}{4}k_{12} \cdot 2\eta_1 + \frac{1}{4}k_2(\eta_2 - \eta_1)^2$$

$\therefore$ In terms of generalised coordinates,

$$\left.\begin{aligned} T &= \frac{1}{4}M(\dot{\eta}_1^2 + \dot{\eta}_2^2) \\ U &= \frac{1}{4}k(\eta_1^2 + \eta_2^2) + \underbrace{\frac{1}{2}k_{12}\eta_1} \end{aligned}\right\} \text{ when } k_1 = k_2 = k \neq k_{12}$$

<u>NB</u>: There is only one contribution to the coupled spring's potential energy, for η_1 only.
This corresponds to the anti-symmetrical mode

$$x_2 = -x_1$$

$\Rightarrow$ Only under this normal mode does the centre spring experience any stretching. In the symmetrical mode, $x_1 = x_2$, there is <u>no</u> stretching of the centre spring (k_{12}) & so does <u>not</u> appear in the expression for the system's potential energy — as expected.

M&T 12-11 Consider the following electrical circuit:

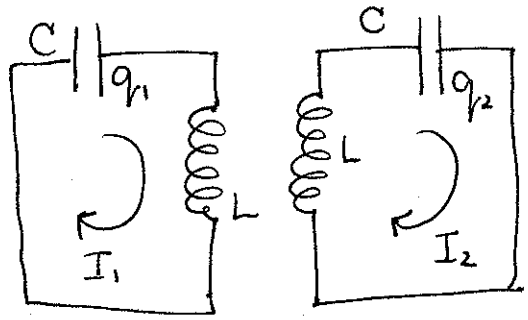

The associated Kirchhoff eqns are

$$L\dot{I}_1 + \frac{q_1}{C} + M\dot{I}_2 = 0$$

$$L\dot{I}_2 + \frac{q_2}{C} + M\dot{I}_1 = 0$$

Writing $I_1 = \dot{q}_1$, then $\dot{I}_1 = \ddot{q}_1$

$\therefore$ The eqns become:

$$L\ddot{q}_1 + \frac{1}{C}q_1 + M\ddot{q}_2 = 0$$

$$L\ddot{q}_2 + \frac{1}{C}q_2 + M\ddot{q}_1 = 0$$

To find the characteristic frequencies:

we write the eqns in matrix form

$$\underbrace{\begin{pmatrix} L & M \\ M & L \end{pmatrix}} \begin{pmatrix} \ddot{q}_1 \\ \ddot{q}_2 \end{pmatrix} = \frac{-1}{C}\mathbb{1}\begin{pmatrix} q_1 \\ q_2 \end{pmatrix}$$

We can write in the form

$$\underset{\sim}{M}\ddot{X} = -\underset{\sim}{K}X$$

To search for normal modes,

$$q_j = B_j e^{i\omega t}$$

want $\underset{\sim}{M}\ddot{X} = -\omega^2 \underset{\sim}{X}$

$\therefore \det(\underset{\sim}{K} - \omega^2 \underset{\sim}{M}) = 0$

setting $\underset{\sim}{q} = \begin{pmatrix} q_1 \\ q_2 \end{pmatrix} = \begin{pmatrix} B_1 e^{i\omega t} \\ B_2 e^{i\omega t} \end{pmatrix}$

then, $\ddot{\underset{\sim}{q}} = -\omega^2 \underset{\sim}{q}$

$$\therefore \left[+\frac{1}{C}\begin{pmatrix} 1 & 0 \\ 0 & 1 \end{pmatrix} + \begin{pmatrix} L & M \\ M & L \end{pmatrix}\cdot(-\omega^2)\right]\begin{pmatrix} q_1 \\ q_2 \end{pmatrix} = 0$$

$$\therefore \begin{pmatrix} \frac{1}{C} - L\omega^2 & -\omega^2 M \\ -\omega^2 M & \frac{1}{C} - L\omega^2 \end{pmatrix}\begin{pmatrix} q_1 \\ q_2 \end{pmatrix} = 0$$

M&T 12-11 (cont^d)

To determine the characteristic frequencies,
want to determine the solutions to the characteristic eqn
- obtained by setting the determinant to zero.

$$\left(\frac{1}{C} - L\omega^2\right)^2 - \left(\omega^2 M\right)^2 = 0$$

$$\therefore \left[\left(\frac{1}{C} - L\omega^2 - \omega^2 M\right)\left(\frac{1}{C} - L\omega^2 + \omega^2 M\right)\right] = 0$$

$$\therefore \frac{1}{C} - \omega^2(L+M) = 0 \quad \text{OR} \quad \frac{1}{C} - \omega^2(L-M) = 0$$

$$\therefore \omega^2 = \frac{1}{C(L+M)} \quad \text{OR} \quad \omega^2 = \frac{1}{C(L-M)}$$

$\therefore$ The two characteristic frequencies are:

$$\omega_1 = \frac{1}{\sqrt{C(L+M)}} \quad \text{and} \quad \omega_2 = \frac{1}{\sqrt{C(L-M)}}$$